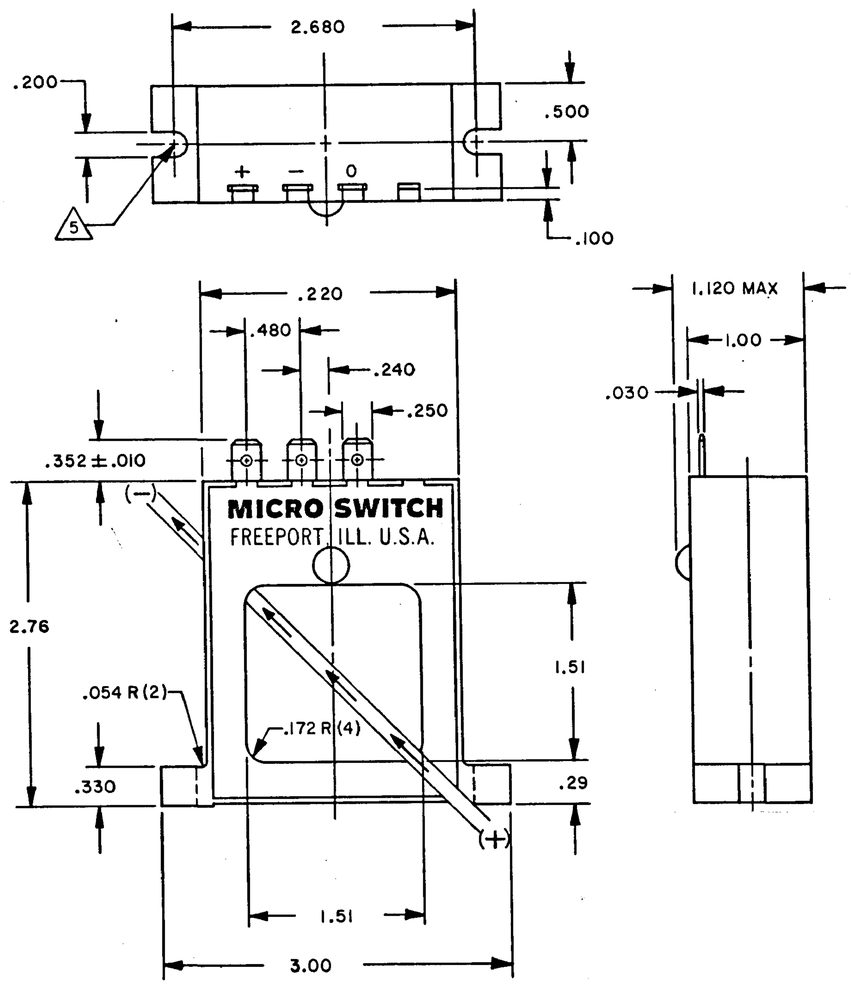

4 OUTPUT CIRCUIT ELECTRICAL CHARACTERISTICS		
SUPPLY CURRENT	16 mA 13 mA	SWITCH RELEASED SWITCH OPERATED
TRANSISTOR OUTPUT SATURATION VOLTAGE	.30 VOLTS	SINKING 100 mA
TRANSISTOR OUTPUT LEAKAGE CURRENT	10 μA	SWITCH RELEASED
OUTPUT SWITCHING TIME	2.0 μS RISE TIME 1.0 μS FALL TIME	SINKING 100 mA

ABSOLUTE MAXIMUM RATINGS 1	
SUPPLY VOLTAGE	24 VDC
OUTPUT CURRENT	100 mA
TEMPERATURE	-40°C TO +125°C
CURRENT	DEVICE WILL NOT BE DAMAGED BY CURRENT OVER-DRIVE

OPERATE 2 CURRENT 3 (AMP-TURNS) @ 25°C	OPERATE 2 CURRENT 3 (AMP-TURNS) -25°C - 85°C	RELEASE CURRENT (AMP-TURNS) -25°C - 85°C	SUPPLY VOLTAGE (V_S)	RESPONSE TIME (μS) MAX
$3.5^{+3.0}_{-1.3}$	$3.5^{+4.0}_{-1.8}$	0.6 MIN	8-16	100

NOTES

1. ABSOLUTE MAXIMUM RATINGS ARE THE EXTREME LIMITS THAT THE DEVICE WILL WITHSTAND WITHOUT DAMAGE TO THE DEVICE. HOWEVER, THE ELECTRICAL CHARACTERISTICS ARE NOT GUARANTEED AS THE MAXIMUM LIMITS (ABOVE RECOMMENDED OPERATING CONDITIONS) ARE APPROACHED.
2. OPERATING CURRENT SPECIFICATIONS ARE FOR CONVENTIONAL CURRENT FLOW IN THE INDICATED DIRECTION.WITH CONVENTIONAL CURRENT FLOW IN THE OPPOSITE DIRECTION, THE OPERATING CURRENT WILL CHANGE. ALSO, FOLLOWING A CURRENT REVERSAL, THE NEXT FEW OPERATIONS IN THE FORWARD DIRECTION MAY HAVE A MINOR SHIFT IN OPERATE POINT.
3. EXPOSURE TO LARGE STRAY MAGNETIC FIELDS COULD EFFECT THE OPERATING CURRENT
4. THESE SPECIFICATIONS ARE MAXIMUM RATINGS AT 16 VOLTS SUPPLY AND AT A ROOM TEMPERATURE OF 24° ± 2°C ONLY
5. MOUNTING HOLES WILL ACCEPT A NO. 10 ROUND HEAD SCREW LOCATED ON 2.680 CENTERS

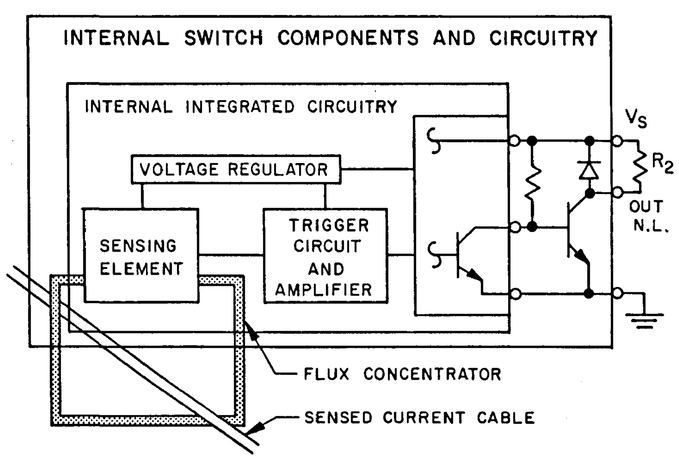

THIS DRAWING COVERS A PROPRIETARY ITEM AND IS THE PROPERTY OF MICRO SWITCH. A DIVISION OF HONEYWELL. THIS DRAWING IS NOT TO BE COPIED OR USED WITHOUT THE APPROVAL OF MICRO SWITCH.

MICRO SWITCH
a Honeywell Division

3.5 AMP THRU HOLE CURRENT SENSOR

CATALOG LISTING
CSDB1CC

THIRD ANGLE PROJECTION

SCALE FULL

DO NOT SCALE PRINT

UNLESS OTHERWISE SPECIFIED TOLERANCES ARE

ONE PLACE	(.0)	± .030
TWO PLACE	(.00)	± .015
THREE PLACE	(.000)	± .005
ANGLES		±

RAW MATERIAL — COMMERCIAL STANDARD

DIMENSIONS ARE IN INCHES AND ARE TO BE MET BEFORE PROTECTIVE COATINGS ARE APPLIED

MICRO SWITCH STANDARDS APPLY

WEIGHT

DRAWING NUMBER CSDB1CC
RELEASE NO. PR-14509 REPLACES
ISSUE X2
CHECK
REVISIONS
A ADV-REL PR-14509 T A D 6 FEB 87
CHECK
24 SEPT 85
CHECK CEC
CHECK
DRAWN GLH 24 SEPT 85
FO-52863-8